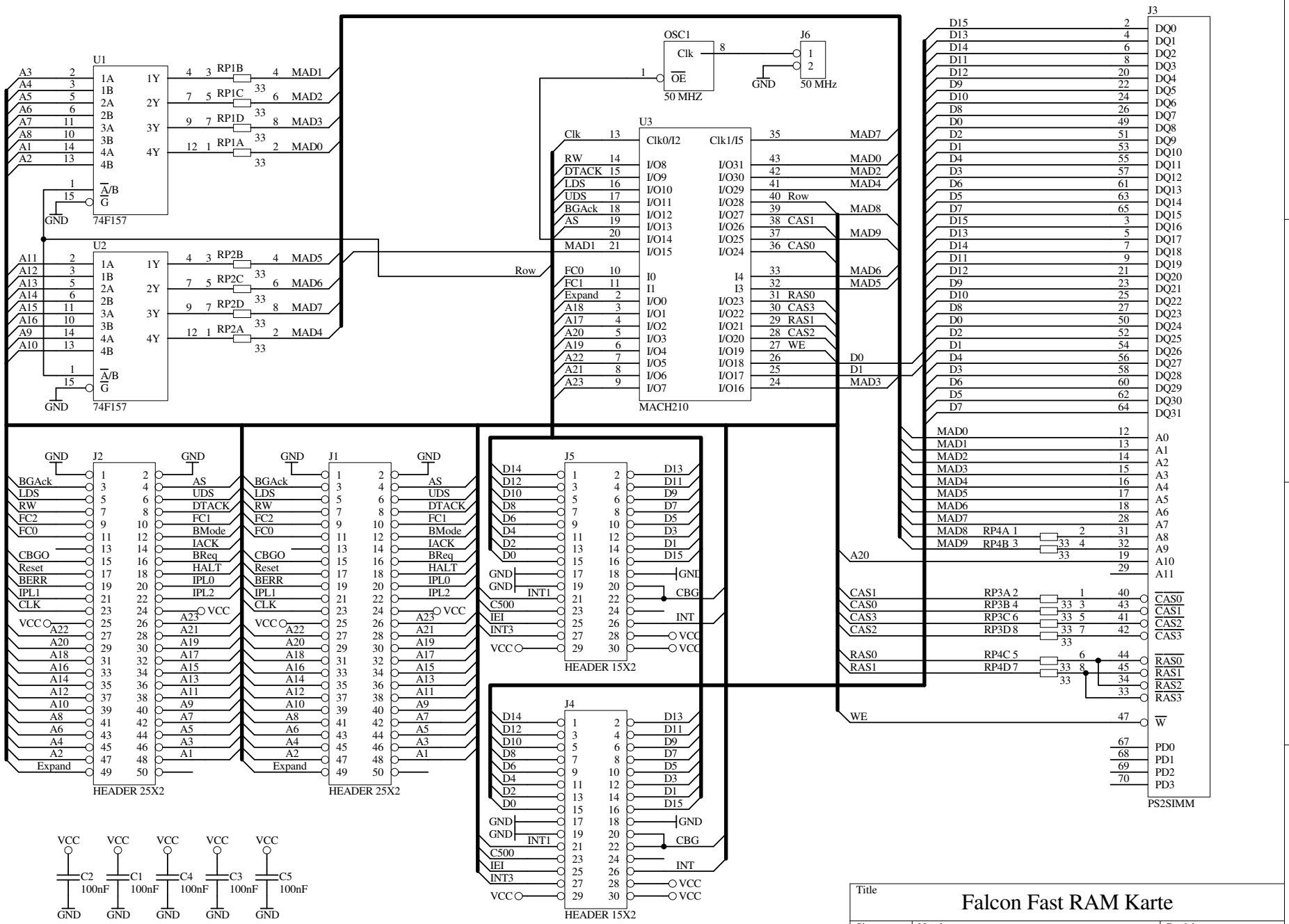

Title	Falcon Fast RAM Karte
Size: Letter	Number: MAGNUM
Revision	1.1
Date:	8-Apr-2009
Sheet of	
File:	S:\PROJEKTE\..\MAGNUM.SCH
Drawn By:	